bigstone

（WhatsApp）
Lin.bigstone

bigstone-nj.com

（Wechat）
徐磊@bigstone

NANJING BIGSTONE

2026-2027 PRODUCT CATALOG

bigstone

NANJING BIGSTONE ELECTRONIC & TECHNOLOGY CO.,LTD
Add: 6F Building A, No. 327, Nanpu Road, Pukou District, Nanjing
Tel: +86 25 89618445 Fax: +86 25 58849541
Phone: +86 13390792272 WhatsApp：Lin.bigstone
Wechat: 13390792272 Mail: lin@bigstone-nj.com
www.bigstone-nj.com

CONTENTS

C730/C731/C732 03
D420/D431/D432 04
M530/M531/M532 05
C930/C931/C932 06
E230/E231/E232C710 07
C810 08
C900 09
C900E 10
M210 11
M210C 12
M210TL 13
M210CTL 14
M200 15
M200C 16
M300C-B 17
M300C-BH 18
M500 19
M500U 20
L100 21
D200 22
D400 23
D410 24
D420 25
D500 26

Contents

C310 27
C310U 28
M100 29
C700 30
C710 31
C300 32
C300S 33
C300T 34
C300U 35
C400 36
C500 37
C500B 38
E200 39
E300 40
E400 41
DUAL BATTERY BALANCER 42
A200/A300 43
A400/A400-22 44
A400-32/A500-USB2.0 45
A704/A708 46
LS02/LS03 47
LS04/LS05 48
P12L/P12L-H/P14L/P24L/P48L 49
V12LS/V24LS 50

VA PANEL C730/C731/C732

C730: New GB version: domestic 4G + dual-band Beidou positioning
C731: European version: European 4G + dual-band positioning
C732: North American version: North American 4G + dual-band positioning.

Mounting Parameters

Communication	UART/CAN
Dimensions	90/50/50mm
Handlebar for Holding	Φ22.2/25.4/32mm

Core Date

Screen	5.0'LCD
Display Type	VA STATIC
Rated Voltage	24/36/48V

Display Information

ON/OFF	Yes
Current display	Yes
Riding mode selection	Yes
Speed display	Yes
KM/H & MPH	Yes
Backlight indicator	Yes
6KM/H work	Yes
PAS level selection	Yes
Error code indicator	Yes
SET operation	Yes
Distance indicator	Yes
Trip time indicator	Yes
Battery indicator	Yes
Auto sleep after 5 minutes	Yes

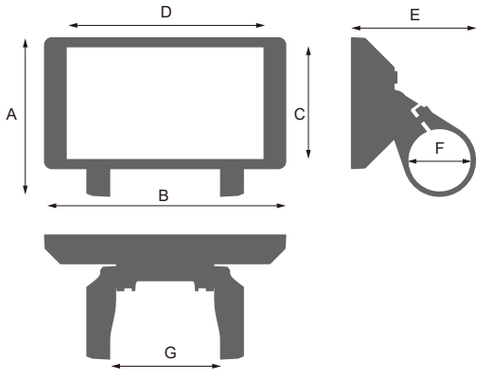

Dimension A	80.7mm
Dimension B	122.5mm
Dimension C	54.2mm
Dimension D	96.4mm
Dimension E	63.2mm
Dimension F	Φ22.2/25.4/32mm
Dimension G	55.7mm

Tests&Certifications

IP-Code	IP65
Certifications	CE/EN15194 Rohs

VA PANEL D430/D431/D432

D430: New GB version: domestic 4G + dual-band Beidou positioning
D431: European version: European 4G + dual-band positioning
D432: North American version: North American 4G + dual-band positioning.

Mounting Parameters

Communication	UART/CAN
Dimensions	100.3/82.6/73.8mm
Handlebar for Holding	Φ22.2/25.4/32mm

Core Date

Screen	LCD
Display Type	VA STATIC
Rated Voltage	24/36/48V

Display Information

ON/OFF	Yes
Current display	Yes
Riding mode selection	Yes
Speed display	Yes
KM/H & MPH	Yes
Backlight indicator	Yes
6KM/H work	Yes
PAS level selection	Yes
Error code indicator	Yes
SET operation	Yes
Distance indicator	Yes
Trip time indicator	Yes
Battery indicator	Yes
Auto sleep after 5 minutes	Yes

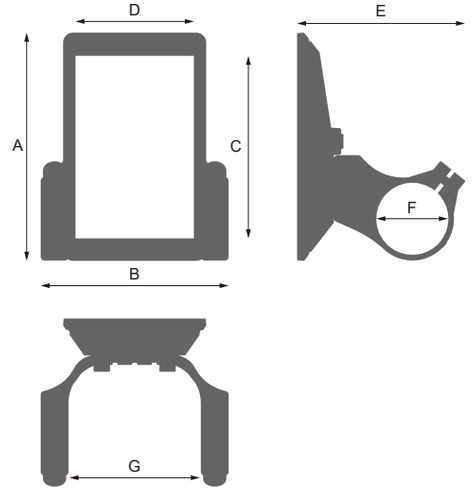

Dimension A	100.3mm
Dimension B	82.6mm
Dimension C	80.2mm
Dimension D	51.9mm
Dimension E	73.8mm
Dimension F	Φ22.2/25.4/32mm

Tests&Certifications

IP-Code	IP65
Certifications	CE/EN15194 Rohs

TFT PANEL M530/M531/M532

M530: New GB version: domestic 4G + dual-band Beidou positioning
M531: European version: European 4G + dual-band positioning
M532: North American version: North American 4G + dual-band positioning.

Mounting Parameters

Communication	UART/CAN
Dimensions	76/47/52mm
Handlebar for Holding	Φ22.2mm

Core Date

Screen	TFT
Display Type	2.0'IPSTFT
Rated Voltage	24/36/48V

Display Information

ON/OFF	Yes
Current display	Yes
Riding mode selection	Yes
Speed display	Yes
KM/H & MPH	Yes
Backlight indicator	Yes
6KM/H work	Yes
PAS level selection	Yes
Error code indicator	Yes
SET operation	Yes
Distance indicator	Yes
Trip time indicator	Yes
Battery indicator	Yes
Auto sleep after 5 minutes	Yes

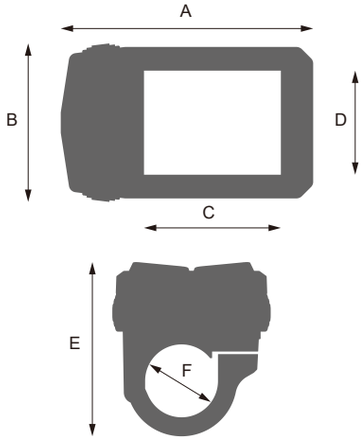

Dimension A	76mm
Dimension B	47mm
Dimension C	41mm
Dimension D	31mm
Dimension E	52mm
Dimension F	22.2mm

Tests&Certifications

IP-Code	IP65
Certifications	CE/EN15194 Rohs

TFT PANEL C930/C931/C932

C930: New GB version: domestic 4G + dual-band Beidou positioning
C931: European version: European 4G + dual-band positioning
C932: North American version: North American 4G + dual-band positioning.

Mounting Parameters

Communication	UART/CAN
Dimensions	60/100/70mm
Handlebar for Holding	Φ22.2/25.4/32mm

Core Date

Screen	TFT
Display Type	3.5IPSTFT
Rated Voltage	24/36/48V

Display Information

ON/OFF	Yes
Current display	Yes
Riding mode selection	Yes
Speed display	Yes
KM/H & MPH	Yes
Backlight indicator	Yes
6KM/H work	Yes
PAS level selection	Yes
Error code indicator	Yes
SET operation	Yes
Distance indicator	Yes
Trip time indicator	Yes
Battery indicator	Yes
Auto sleep after 5 minutes	Yes

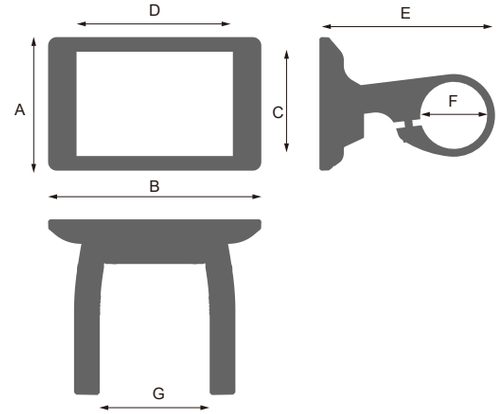

Dimension A	63mm
Dimension B	100mm
Dimension C	50mm
Dimension D	72mm
Dimension E	70mm
Dimension F	Φ22.2/25.4/32mm
Dimension G	51.8mm

Tests&Certifications

IP-Code	IP65
Certifications	CE/EN15194 Rohs

LED PANEL E230/E231/E232

E230: New GB version: domestic 4G + dual-band Beidou positioning
E231: European version: European 4G + dual-band positioning
E232: North American version: North American 4G + dual-band positioning.

Mounting Parameters

Communication	UART
Dimensions	74/35/45.7mm
Handlebar for Holding	Φ22.2mm

Core Date

Screen	LED
Rated Voltage	24/36/48V

Display Information

ON/OFF	Yes
Riding mode selection	Yes
Battery indicator	Yes

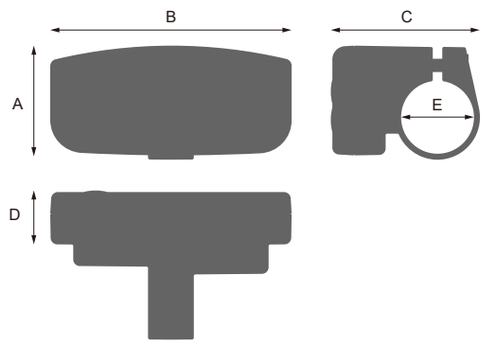

Dimension A	35mm
Dimension B	74mm
Dimension C	45.7mm
Dimension D	16mm
Dimension E	Φ22.2mm

Tests&Certifications

IP-Code	IP65
Certifications	CE/EN15194 Rohs

TFT PANEL C810

Mounting Parameters

Communication	UART/CAN
Dimensions	95.4/79.4/58.5mm
Handlebar for Holding	Φ22.2/25.4/32mm

Core Date

Screen	TFT
Display Type	3.0'IPSTFT
Rated Voltage	24/36/48V
Display Resolution	240×320 RGB

Display Information

ON/OFF	Yes
Current display	Yes
Riding mode selection	Yes
Speed display	Yes
KM/H & MPH	Yes
Backlight indicator	Yes
6KM/H work	Yes
PAS level selection	Yes
Error code indicator	Yes
SET operation	Yes
Distance indicator	Yes
Trip time indicator	Yes
Battery indicator	Yes
Auto sleep after 5 minutes	Yes

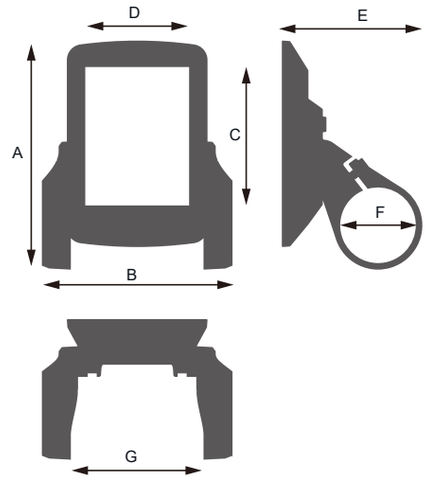

Dimension A	95.4mm
Dimension B	79.4mm
Dimension C	57.6mm
Dimension D	43.2mm
Dimension E	58.5mm
Dimension F	Φ22.2/25.4/32mm
Dimension G	55.4mm

Tests&Certifications

IP-Code	IP65
Certifications	CE/EN15194 Rohs

TFT PANEL C900

Mounting Parameters

Communication	UART/CAN
Dimensions	63/100/70mm
Handlebar for Holding	Φ22.2/25.4/32mm

Core Date

Screen	TFT
Display Type	3.5'TFT
Rated Voltage	24/36/48V
Display Resolution	480×320 RGB

Display Information

ON/OFF	Yes
Current display	Yes
Riding mode selection	Yes
Speed display	Yes
KM/H & MPH	Yes
Backlight indicator	Yes
6KM/H work	Yes
PAS level selection	Yes
Error code indicator	Yes
SET operation	Yes
Distance indicator	Yes
Trip time indicator	Yes
Battery indicator	Yes
Auto sleep after 5 minutes	Yes
USB charging selection/C900	No
USB charging selection/C900-USB	Yes

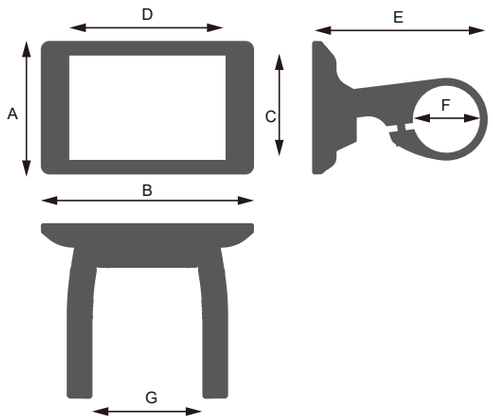

Dimension A	63mm
Dimension B	100mm
Dimension C	50mm
Dimension D	72mm
Dimension E	70mm
Dimension F	Φ22.2/25.4/32mm
Dimension G	51.8mm

Tests&Certifications

IP-Code	IP65
Certifications	CE/EN15194 Rohs

TFT PANEL C900E

Mounting Parameters

Communication	UART/CAN
Dimensions	100/63/63mm
Handlebar for Holding	Φ22.2/25.4/32mm

Core Date

Screen	TFT
Display Type	3.5'TFT
Rated Voltage	24/36/48V
Display Resolution	320×480 RGB

Display Information

ON/OFF	Yes
Current display	Yes
Riding mode selection	Yes
Speed display	Yes
KM/H & MPH	Yes
Backlight indicator	Yes
6KM/H work	Yes
PAS level selection	Yes
Error code indicator	Yes
SET operation	Yes
Distance indicator	Yes
Trip time indicator	Yes
Battery indicator	Yes
Auto sleep after 5 minutes	Yes
USB charging selection/C900E	No
USB charging selection/C900E-USB	Yes

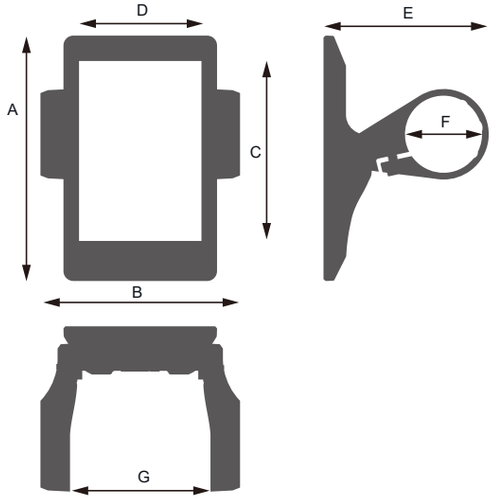

Dimension A	100mm
Dimension B	63mm
Dimension C	50mm
Dimension D	72mm
Dimension E	63mm
Dimension F	Φ22.2/25.4/32mm
Dimension G	57.5mm

Tests&Certifications

IP-Code	IP65
Certifications	CE/EN15194 Rohs

LED PANEL

LED PANEL M210

Mounting Parameters

Communication	UART/CAN
Dimensions	71.8/25.6/42.2mm
Handlebar for Holding	Φ22.2mm

Core Date

Screen	LED
Display Type	1.6'LED
Nominal Voltage	24/36/48V

Display Information

ON/OFF	Yes
Speed display	Yes
KM/H & MPH	Yes
Backlight indicator	Yes
6KM/H work	Yes
PAS level selection	Yes
Error code indicator	Yes
SET operation	Yes
Battery indicator	Yes
Auto sleep after 5 minutes	Yes
Throttle	No

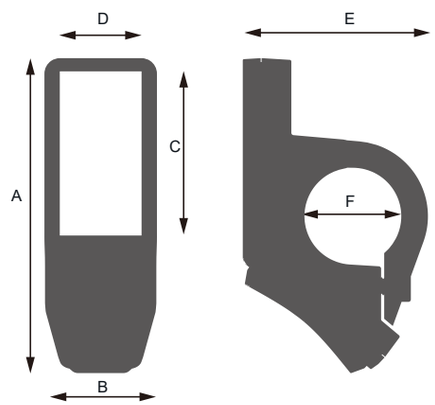

Dimension A	71.8mm
Dimension B	25.6mm
Dimension C	37.4mm
Dimension D	18.6mm
Dimension E	42.2mm
Dimension F	Φ22.2mm

Tests&Certifications

IP-Code	IP65
Certifications	CE/EN15194 Rohs

TFT PANEL

TFT PANEL M210C

Mounting Parameters

Communication	UART/CAN
Dimensions	71.8/25.6/42.2mm
Handlebar for Holding	Φ22.2mm

Core Date

Screen	TFT
Display Type	1.6'IPSTFT
Rated Voltage	24/36/48V
Display Resolution	172×320 RGB

Display Information

ON/OFF	Yes
Riding mode selection	Yes
Speed display	Yes
KM/H & MPH	Yes
Backlight indicator	Yes
6KM/H work	Yes
PAS level selection	Yes
Error code indicator	Yes
SET operation	Yes
Distance indicator	Yes
Trip time indicator	Yes
Battery indicator	Yes
Auto sleep after 5 minutes	Yes
Throttle	No

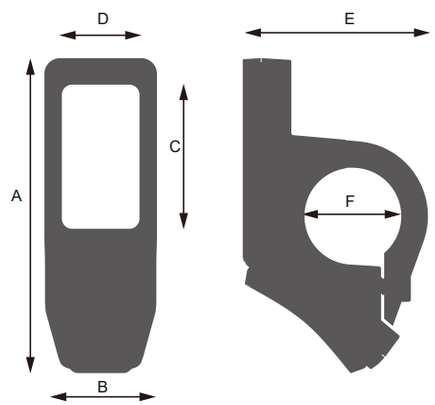

Dimension A	71.8mm
Dimension B	25.6mm
Dimension C	32.8mm
Dimension D	17.6mm
Dimension E	42.2mm
Dimension F	Φ22.2mm

Tests&Certifications

IP-Code	IP65
Certifications	CE/EN15194 Rohs

LED PANEL

LED PANEL M210TL

Mounting Parameters

Communication	UART/CAN
Dimensions	79.6/49.5/52mm
Handlebar for Holding	Φ22.2mm

Core Date

Screen	LED
Display Type	1.6'LED
Nominal Voltage	24/36/48V

Display Information

ON/OFF	Yes
Speed display	Yes
KM/H & MPH	Yes
Backlight indicator	Yes
6KM/H work	Yes
PAS level selection	Yes
Error code indicator	Yes
SET operation	Yes
Battery indicator	Yes
Auto sleep after 5 minutes	Yes
Throttle	Yes

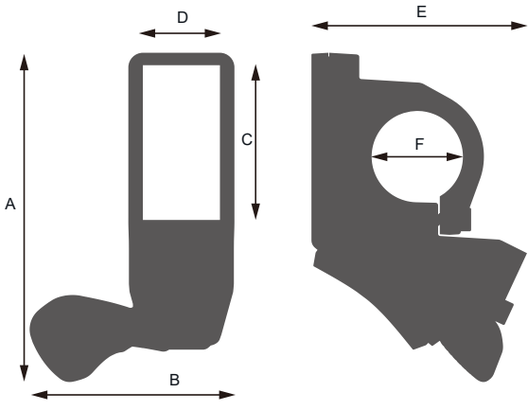

Dimension A	79.6mm
Dimension B	49.5mm
Dimension C	37.4mm
Dimension D	18.6mm
Dimension E	52mm
Dimension F	Φ22.2mm

Tests&Certifications

IP-Code	IP65
Certifications	CE/EN15194 Rohs

TFT PANEL

TFT PANEL M210CTL

Mounting Parameters

Communication	UART/CAN
Dimensions	79.6/49.5/52mm
Handlebar for Holding	Φ22.2mm

Core Date

Screen	TFT
Display Type	1.6'IPSTFT
Rated Voltage	24/36/48V
Display Resolution	172×320 RGB

Display Information

ON/OFF	Yes
Speed display	Yes
KM/H & MPH	Yes
Backlight indicator	Yes
6KM/H work	Yes
PAS level selection	Yes
Error code indicator	Yes
SET operation	Yes
Battery indicator	Yes
Auto sleep after 5 minutes	Yes
Throttle	No

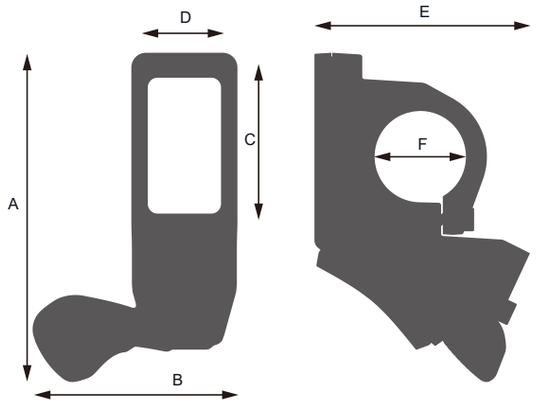

Dimension A	79.6mm
Dimension B	49.5mm
Dimension C	32.8mm
Dimension D	17.6mm
Dimension E	52mm
Dimension F	Φ22.2mm

Tests&Certifications

IP-Code	IP65
Certifications	CE/EN15194 Rohs

OLED PANEL

OLED PANEL M200

Mounting Parameters

Communication	UART/CAN
Dimensions	70.5/24/47mm
Handlebar for Holding	Φ22.2mm

Core Date

Screen	OLED
Display Type	1.6'OLED
Rated Voltage	24/36/48V
Display Resolution	64×128 WB

Display Information

ON/OFF	Yes
Speed display	Yes
KM/H & MPH	Yes
Backlight indicator	Yes
6KM/H work	Yes
PAS level selection	Yes
Error code indicator	Yes
SET operation	Yes
Battery indicator	Yes
Auto sleep after 5 minutes	Yes
Throttle	No

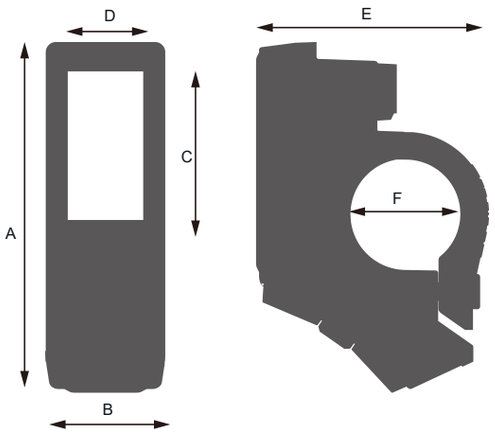

Dimension A	70.5mm
Dimension B	24mm
Dimension C	30mm
Dimension D	15.3mm
Dimension E	47mm
Dimension F	Φ22.2mm

Tests&Certifications

IP-Code	IP65
Certifications	CE/EN15194 Rohs

TFT PANEL

TFT PANEL M200C

Mounting Parameters

Communication	UART/CAN
Dimensions	70.5/24/47mm
Handlebar for Holding	Φ22.2mm

Core Date

Screen	TFT
Display Type	1.6'TFT
Rated Voltage	24/36/48V
Display Resolution	170×320 RGB

Display Information

ON/OFF	Yes
Speed display	Yes
KM/H & MPH	Yes
Backlight indicator	Yes
6KM/H work	Yes
PAS level selection	Yes
Error code indicator	Yes
SET operation	Yes
Battery indicator	Yes
Auto sleep after 5 minutes	Yes
Throttle	No

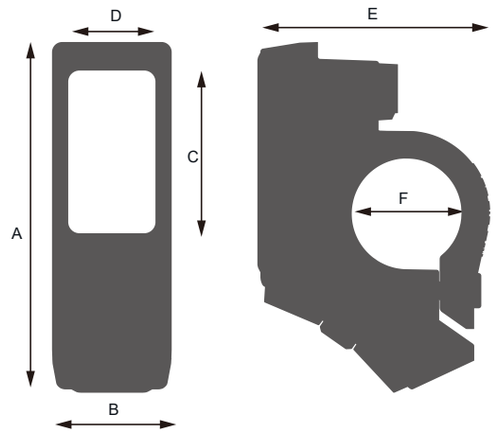

Dimension A	70.5mm
Dimension B	24mm
Dimension C	32.8mm
Dimension D	17.6mm
Dimension E	47mm
Dimension F	Φ22.2mm

Tests&Certifications

IP-Code	IP65
Certifications	CE/EN15194 Rohs

TFT PANEL M300C-B

Mounting Parameters

Communication	UART/CAN
Dimensions	132/54/98mm
Handlebar for Holding	Φ32mm

Core Data

Screen	TFT
Display Type	2.0'IPSTFT
Rated Voltage	24/36/48V
Display Resolution	240×320 RGB

Display Information

ON/OFF	Yes
Current display	Yes
Riding mode selection	Yes
Speed display	Yes
KM/H & MPH	Yes
Backlight indicator	Yes
6KM/H work	Yes
PAS level selection	Yes
Error code indicator	Yes
SET operation	Yes
Distance indicator	Yes
Trip time indicator	Yes
Battery indicator	Yes
Auto sleep after 5 minutes	Yes

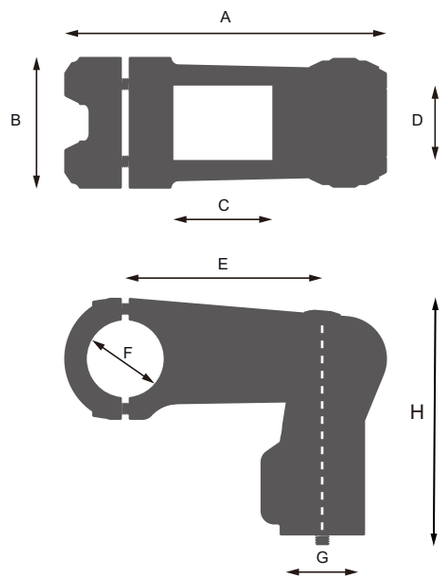

Dimension A	132mm
Dimension B	54mm
Dimension C	40mm
Dimension D	30mm
Dimension E	81mm
Dimension F	32mm
Dimension G	35mm
Dimension H	98mm

Tests&Certifications

IP-Code	IP65
Certifications	CE/EN15194 Rohs

TFT PANEL M300C-BH

Mounting Parameters

Communication	UART/CAN
Dimensions	132/54/106mm
Handlebar for Holding	Φ32mm

Core Data

Screen	TFT
Display Type	2.0'IPSTFT
Rated Voltage	24/36/48V
Display Resolution	240×320 RGB

Display Information

ON/OFF	Yes
Current display	Yes
Riding mode selection	Yes
Speed display	Yes
KM/H & MPH	Yes
Backlight indicator	Yes
6KM/H work	Yes
PAS level selection	Yes
Error code indicator	Yes
SET operation	Yes
Distance indicator	Yes
Trip time indicator	Yes
Battery indicator	Yes
Auto sleep after 5 minutes	Yes

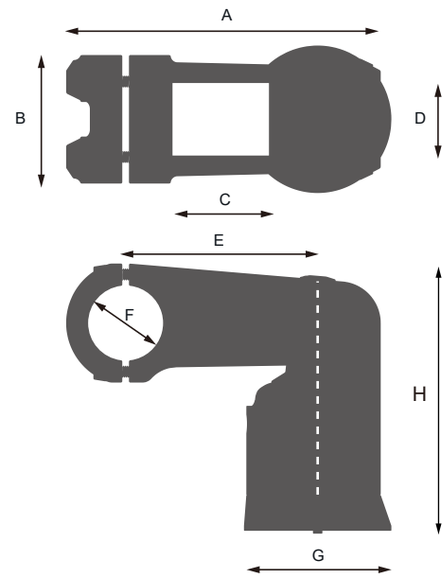

Dimension A	132mm
Dimension B	54mm
Dimension C	40mm
Dimension D	30mm
Dimension E	81mm
Dimension F	32mm
Dimension G	62mm
Dimension H	106mm

Tests&Certifications

IP-Code	IP65
Certifications	CE/EN15194 Rohs

TFT PANEL M500

Mounting Parameters

Communication	UART/CAN
Dimensions	76/47/52mm
Handlebar for Holding	Φ22.2mm

Core Data

Screen	TFT
Display Type	2.0'IPSTFT
Rated Voltage	24/36/48V
Display Resolution	240×320 RGB

Display Information

ON/OFF	Yes
Current display	Yes
Riding mode selection	Yes
Speed display	Yes
KM/H & MPH	Yes
Backlight indicator	Yes
6KM/H work	Yes
PAS level selection	Yes
Error code indicator	Yes
SET operation	Yes
Distance indicator	Yes
Trip time indicator	Yes
Battery indicator	Yes
Auto sleep after 5 minutes	Yes
USB charging selection	No

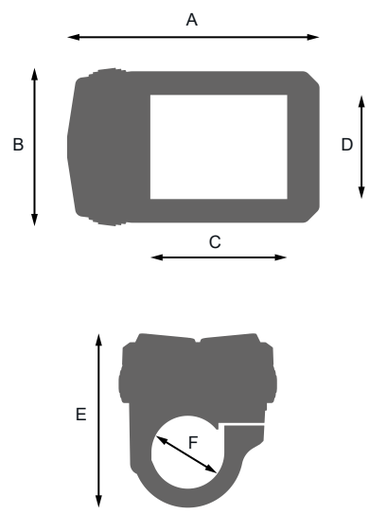

Dimension A	76mm
Dimension B	47mm
Dimension C	41mm
Dimension D	31mm
Dimension E	52mm
Dimension F	Φ22.2mm

Tests&Certifications

IP-Code	IP65
Certifications	CE/EN15194 Rohs

TFT PANEL M500U

Mounting Parameters

Communication	UART/CAN
Dimensions	76/47/52mm
Handlebar for Holding	Φ22.2mm

Core Data

Screen	TFT
Display Type	2.0'IPSTFT
Rated Voltage	24/36/48V
Display Resolution	240×320 RGB

Display Information

ON/OFF	Yes
Current display	Yes
Riding mode selection	Yes
Speed display	Yes
KM/H & MPH	Yes
Backlight indicator	Yes
6KM/H work	Yes
PAS level selection	Yes
Error code indicator	Yes
SET operation	Yes
Distance indicator	Yes
Trip time indicator	Yes
Battery indicator	Yes
Auto sleep after 5 minutes	Yes
USB charging selection	Yes

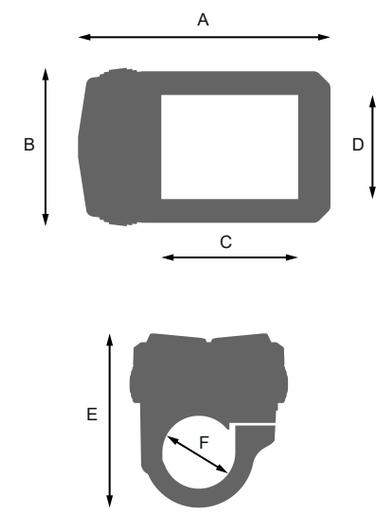

Dimension A	76mm
Dimension B	47mm
Dimension C	41mm
Dimension D	31mm
Dimension E	52mm
Dimension F	Φ22.2mm

Tests&Certifications

IP-Code	IP65
Certifications	CE/EN15194 Rohs

LED PANEL

LED PLANEL L100

Mounting Parameters

Communication	UART
Dimensions	100.8/74.6/75mm
Handlebar for Holding	Φ22.2/25.4/31.8mm

Core Date

Screen	OLED
Display Type	4.0'OLED
Norminal Voltage	24/36/48V

Display Information

ON/OFF	Yes
Current display	Yes
Riding mode selection	Yes
Speed display	Yes
Backlight indicator	Yes
6KM/H work	Yes
PAS level selection	Yes
Error code indicator	Yes
SET operation	Yes
Distance indicator	Yes
Battery indicator	Yes
Auto sleep after 5 minutes	Yes

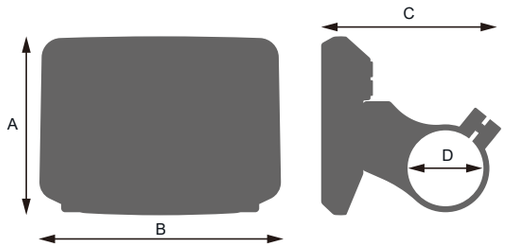

Dimension A	74.6mm
Dimension B	100.8mm
Dimension C	75mm
Dimension D	Φ31.8mm

Tests&Certifications

IP-Code	IP65
Certifications	CE/EN15194 Rohs

TFT PANEL

TFT PLANEL D200

Mounting Parameters

Communication	UART/CAN
Dimensions	86/59/53mm
Handlebar for Holding	Φ22.2/25.4/31.8mm

Core Data

Screen	TFT
Display Type	2.4'IPSTFT
Rated Voltage	24/36/48V
Display Resolution	240×320 RGB

Display Information

ON/OFF	Yes
Riding mode selection	Yes
Speed display	Yes
KM/H & MPH	Yes
Backlight indicator	Yes
6KM/H work	Yes
PAS level selection	Yes
Error code indicator	Yes
SET operation	Yes
Distance indicator	Yes
Trip time indicator	Yes
Battery indicator	Yes
Auto sleep after 5 minutes	Yes

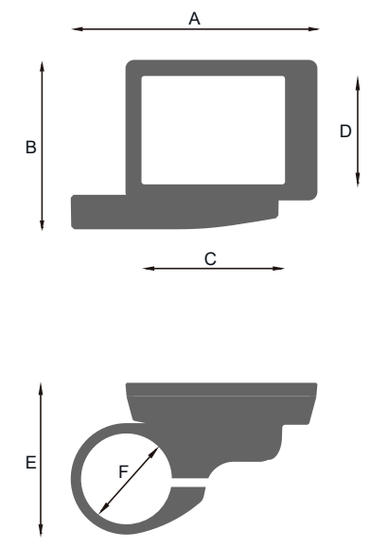

Dimension A	86mm
Dimension B	59mm
Dimension C	50mm
Dimension D	38mm
Dimension E	53mm
Dimension F	Φ22.2/25.4/32mm

Tests&Certifications

IP-Code	IP65
Certifications	CE/EN15194 Rohs

LCD PLANEL D400

Mounting Parameters

Communication	UART
Dimensions	110/60/73mm
Handlebar for Holding	Φ22.2/25.4/31.8mm

Core Data

Screen	LCD
Display Type	VA STATIC
Rated Voltage	24/36/48V

Display Information

ON/OFF	Yes
Riding mode selection	Yes
Riding mode selection	Yes
Speed display	Yes
KM/H & MPH	Yes
Backlight indicator	Yes
6KM/H work	Yes
PAS level selection	Yes
Error code indicator	Yes
SET operation	Yes
Distance indicator	Yes
Trip time indicator	Yes
Dual battery indicator	Yes
Auto sleep after 5 minutes	Yes
Dual driver indicator	Yes
Turn light indicator	Yes
Bluetooth&NFC indicator	Yes

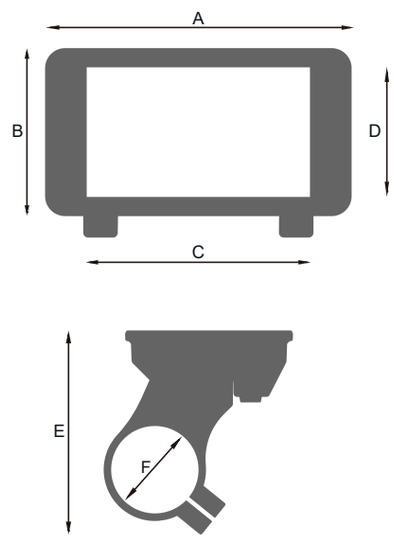

Dimension A	110mm
Dimension B	60mm
Dimension C	81mm
Dimension D	47mm
Dimension E	73mm
Dimension F	Φ22.2/25.4/32mm

Tests&Certifications

IP-Code	IP65
Certifications	CE/EN15194 Rohs

LCD PLANEL D410

Mounting Parameters

Communication	UART
Dimensions	110/60/73mm
Handlebar for Holding	Φ22.2/25.4/31.8mm

Core Data

Screen	LCD
Display Type	VA STATIC
Rated Voltage	24/36/48V

Display Information

ON/OFF	Yes
Riding mode selection	Yes
Riding mode selection	Yes
Speed display	Yes
KM/H & MPH	Yes
Backlight indicator	Yes
6KM/H work	Yes
PAS level selection	Yes
Error code indicator	Yes
SET operation	Yes
Distance indicator	Yes
Trip time indicator	Yes
Dual battery indicator	Yes
Auto sleep after 5 minutes	Yes
Dual driver indicator	Yes
Turn light indicator	Yes
Bluetooth&NFC indicator	Yes

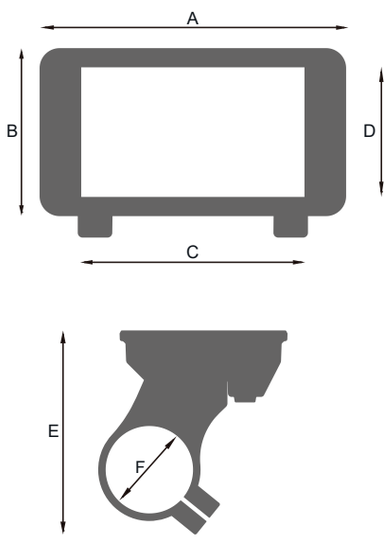

Dimension A	110mm
Dimension B	60mm
Dimension C	81mm
Dimension D	45mm
Dimension E	73mm
Dimension F	Φ22.2/25.4/32mm

Tests&Certifications

IP-Code	IP65
Certifications	CE/EN15194 Rohs

VA PANEL D420

Mounting Parameters

Communication	UART/CAN
Dimensions	100.3/82.6/73.8mm
Handlebar for Holding	Φ22.2/25.4/32mm

Core Date

Screen	LCD
Display Type	VA STATIC
Rated Voltage	24/36/48V

Display Information

ON/OFF	Yes
Current display	Yes
Riding mode selection	Yes
Speed display	Yes
KM/H & MPH	Yes
Backlight indicator	Yes
6KM/H work	Yes
PAS level selection	Yes
Error code indicator	Yes
SET operation	Yes
Distance indicator	Yes
Trip time indicator	Yes
Battery indicator	Yes
Auto sleep after 5 minutes	Yes
USB charging selection	Yes

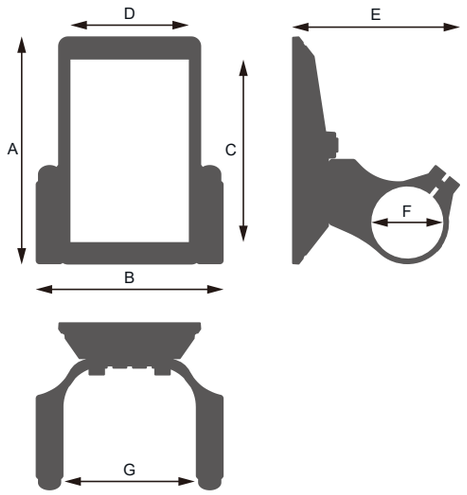

Dimension A	100.3mm
Dimension B	82.6mm
Dimension C	80.2mm
Dimension D	51.9mm
Dimension E	73.8mm
Dimension F	Φ22.2/25.4/32mm

Tests&Certifications

IP-Code	IP65
Certifications	CE/EN15194 Rohs

TFT PLANEL D500

Mounting Parameters

Communication	UART/CAN
Dimensions	61/28/26mm
Handlebar for Holding	Φ22.2/25.4/31.8mm

Core Data

Screen	TFT
Display Type	1.47'IPSTFT
Rated Voltage	24/36/48V
Display Resolution	170×320 RGB

Display Information

ON/OFF	Yes
Riding mode selection	Yes
Speed display	Yes
KM/H & MPH	Yes
Backlight indicator	Yes
6KM/H work	Yes
PAS level selection	Yes
Error code indicator	Yes
SET operation	Yes
Distance indicator	Yes
Trip time indicator	Yes
Battery indicator	Yes
Auto sleep after 5 minutes	Yes

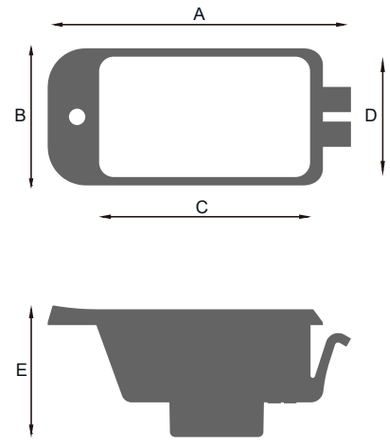

Dimension A	61mm
Dimension B	28mm
Dimension C	43mm
Dimension D	24mm
Dimension E	26mm

Tests&Certifications

IP-Code	IP65
Certifications	CE/EN15194 Rohs

TFT PANEL C310

Mounting Parameters

Communication	UART/CAN
Dimensions	90/50/47mm
Handlebar for Holding	Φ22.2mm

Core Date

Screen	TFT
Display Type	2.4'IPSTFT
Rated Voltage	24/36/48V
Display Resolution	240×320 RGB

Display Information

ON/OFF	Yes
Current display	Yes
Riding mode selection	Yes
Speed display	Yes
KM/H & MPH	Yes
Backlight indicator	Yes
6KM/H work	Yes
PAS level selection	Yes
Error code indicator	Yes
SET operation	Yes
Distance indicator	Yes
Trip time indicator	Yes
Battery indicator	Yes
Auto sleep after 5 minutes	Yes
USB charging selection	No

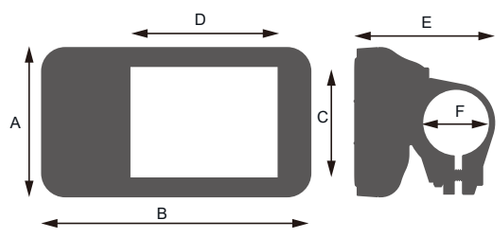

Dimension A	50mm
Dimension B	90mm
Dimension C	40mm
Dimension D	52mm
Dimension E	47mm
Dimension F	Φ22.2mm

Tests&Certifications

IP-Code	IP65
Certifications	CE/EN15194 Rohs

TFT PANEL C310U

Mounting Parameters

Communication	UART/CAN
Dimensions	90/50/50mm
Handlebar for Holding	Φ22.2mm

Core Date

Screen	TFT
Display Type	2.4'IPSTFT
Rated Voltage	24/36/48V
Display Resolution	240×320 RGB

Display Information

ON/OFF	Yes
Current display	Yes
Riding mode selection	Yes
Speed display	Yes
KM/H & MPH	Yes
Backlight indicator	Yes
6KM/H work	Yes
PAS level selection	Yes
Error code indicator	Yes
SET operation	Yes
Distance indicator	Yes
Trip time indicator	Yes
Battery indicator	Yes
Auto sleep after 5 minutes	Yes
USB charging selection	Yes

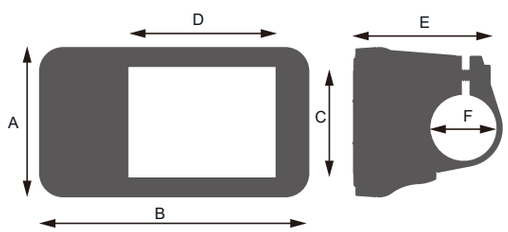

Dimension A	50mm
Dimension B	90mm
Dimension C	40mm
Dimension D	52mm
Dimension E	50mm
Dimension F	Φ22.2mm

Tests&Certifications

IP-Code	IP65
Certifications	CE/EN15194 Rohs

LED PLANEL M100

Mounting Parameters

Communication	UART
Dimensions	52/19/47mm
Handlebar for Holding	Φ22.2mm

Core Date

Screen	5 Groups RED/BLUE
Display Type	LED
Nominal Voltage	5V

Display Information

ON/OFF	Yes
6KM/H work	Yes
Assist level selection	Yes
Error code indicator	Yes
Battery indicator	Yes
Auto sleep after 5 minutes	Yes
Blue tooth connection	Yes

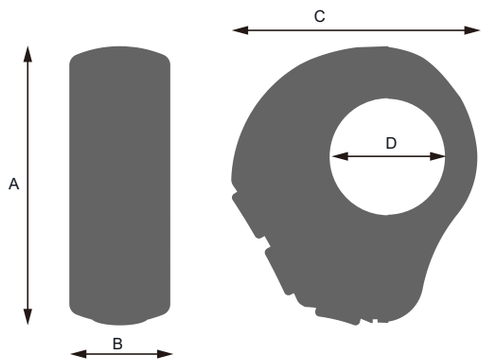

Dimension A	52mm
Dimension B	19mm
Dimension C	47mm
Dimension D	Φ22.2mm

Tests&Certifications

IP-Code	IP65
Certifications	CE/EN15194 Rohs

TFT PANEL C700

Mounting Parameters

Communication	UART/CAN
Dimensions	80.7/122.5/63.2mm
Handlebar for Holding	Φ22.2/25.4/32mm

Core Date

Screen	TFT
Display Type	5.0'IPSTFT
Rated Voltage	24/36/48V
Display Resolution	854×480 RGB

Display Information

ON/OFF	Yes
Current display	Yes
Riding mode selection	Yes
Speed display	Yes
KM/H & MPH	Yes
Backlight indicator	Yes
6KM/H work	Yes
PAS level selection	Yes
Error code indicator	Yes
SET operation	Yes
Distance indicator	Yes
Trip time indicator	Yes
Battery indicator	Yes
Auto sleep after 5 minutes	Yes

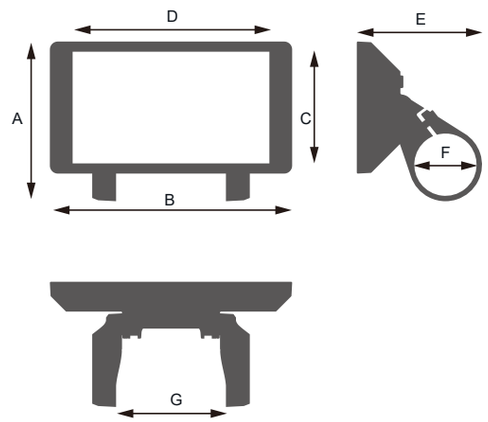

Dimension A	80.7mm
Dimension B	122.5mm
Dimension C	56.4mm
Dimension D	99.5mm
Dimension E	63.2mm
Dimension F	Φ22.2/25.4/32mm
Dimension G	55.7mm

Tests&Certifications

IP-Code	IP65
Certifications	CE/EN15194 Rohs

VA PANEL C710

Mounting Parameters

Communication	UART/CAN
Dimensions	90/50/50mm
Handlebar for Holding	Φ22.2/25.4/32mm

Core Date

Screen	LCD
Display Type	VA STATIC
Rated Voltage	24/36/48V

Display Information

ON/OFF	Yes
Current display	Yes
Riding mode selection	Yes
Speed display	Yes
KM/H & MPH	Yes
Backlight indicator	Yes
6KM/H work	Yes
PAS level selection	Yes
Error code indicator	Yes
SET operation	Yes
Distance indicator	Yes
Trip time indicator	Yes
Battery indicator	Yes
Auto sleep after 5 minutes	Yes
USB charging selection	Yes

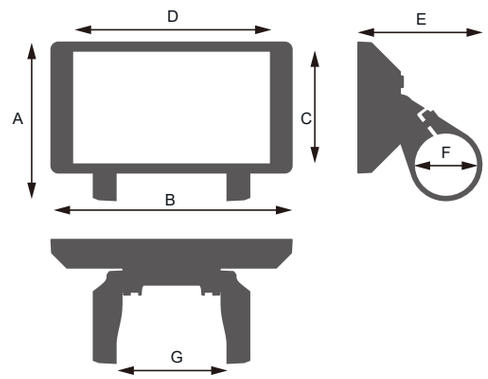

Dimension A	80.7mm
Dimension B	122.5mm
Dimension C	54.2mm
Dimension D	96.4mm
Dimension E	63.2mm
Dimension F	Φ22.2/25.4/32mm
Dimension G	55.7mm

Tests&Certifications

IP-Code	IP65
Certifications	CE/EN15194 Rohs

LCD PLANEL C300

Mounting Parameters

Communication	UART/ANALOG
Dimensions	91/51/52mm
Handlebar for Holding	Φ22.2mm

Core Data

Screen	LCD
Display Type	FSTN
Rated Voltage	24/36/48V

Display Information

ON/OFF	Yes
Current display	Yes
Speed display	Yes
KM/H & MPH	Yes
Backlight indicator	Yes
6KM/H work	Yes
Assist level selection	Yes
Error code indicator	Yes
SET operation	Yes
Distance indicator	Yes
Trip time indicator	Yes
Battery indicator	Yes
Auto sleep after 5 minutes	Yes

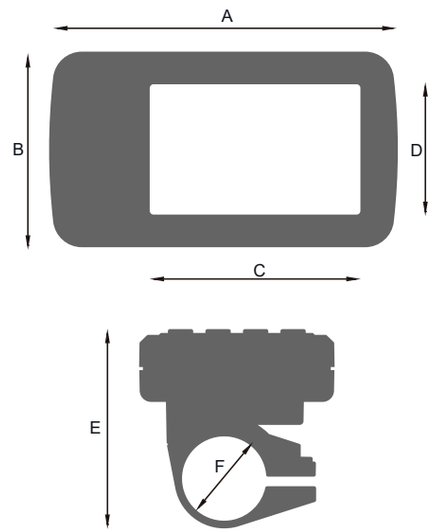

Dimension A	91mm
Dimension B	51mm
Dimension C	55mm
Dimension D	34mm
Dimension E	52mm
Dimension F	Φ22.2mm

Tests&Certifications

IP-Code	IP65
Certifications	CE/EN15194 Rohs

LCD PANEL C300S

Mounting Parameters

Communication	UART/ANALOG/CAN
Dimensions	90/50/47mm
Handlebar for Holding	22mm

Core Data

Screen	LCD
Display Type	FSTN
Rated Voltage	24/36/48V

Display Information

ON/OFF	Yes
Current display	Yes
Speed display	Yes
KM/H & MPH	Yes
Backlight indicator	Yes
6KM/H work	Yes
Assist level selection	Yes
Error code indicator	Yes
SET operation	Yes
Distance indicator	Yes
Trip time indicator	Yes
Battery indicator	Yes
Auto sleep after 5 minutes	Yes

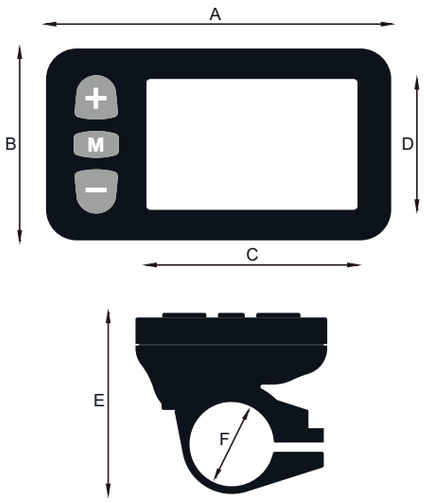

Dimension A	90mm
Dimension B	50mm
Dimension C	56mm
Dimension D	34mm
Dimension E	47mm
Dimension F	22mm

Tests&Certifications

IP-Code	IP65
Certifications	CE/EN15194 Rohs

LCD PANEL C300T

Mounting Parameters

Communication	UART
Dimensions	90/68/59mm
Handlebar for Holding	22mm

Core Data

Screen	LCD
Display Type	FSTN
Rated Voltage	24/36/48V

Display Information

ON/OFF	Yes
Current display	Yes
Speed display	Yes
KM/H & MPH	Yes
Backlight indicator	Yes
6KM/H work	Yes
Assist level selection	Yes
Error code indicator	Yes
SET operation	Yes
Distance indicator	Yes
Trip time indicator	Yes
Battery indicator	Yes
Auto sleep after 5 minutes	Yes
Throttle	Yes

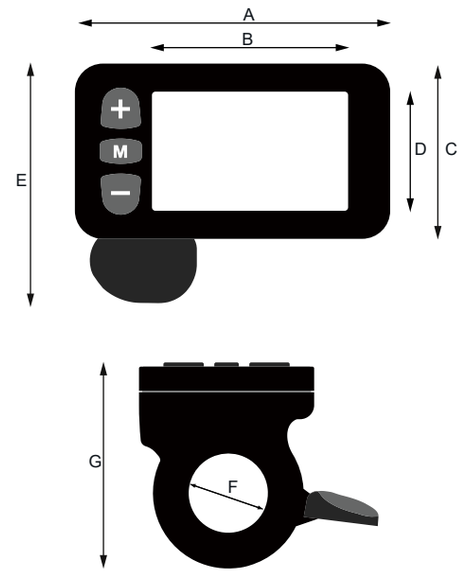

Dimension A	90mm
Dimension B	56mm
Dimension C	50mm
Dimension D	34mm
Dimension E	68mm
Dimension F	22mm
Dimension G	59mm

Tests&Certifications

IP-Code	IP65
Certifications	CE/EN15194 Rohs

LCD PANEL C300U

Mounting Parameters

Communication	UART/ANALOG/CAN
Dimensions	90/50/47mm
Handlebar for Holding	22mm

Core Data

Screen	LCD
Display Type	FSTN
Rated Voltage	24/36/48V

Display Information

ON/OFF	Yes
Current display	Yes
Speed display	Yes
KM/H & MPH	Yes
Backlight indicator	Yes
6KM/H work	Yes
Assist level selection	Yes
Error code indicator	Yes
SET operation	Yes
Distance indicator	Yes
Trip time indicator	Yes
Battery indicator	Yes
Auto sleep after 5 minutes	Yes
USB charging selection/C300U	Yes
USB charging selection/C300S	NO

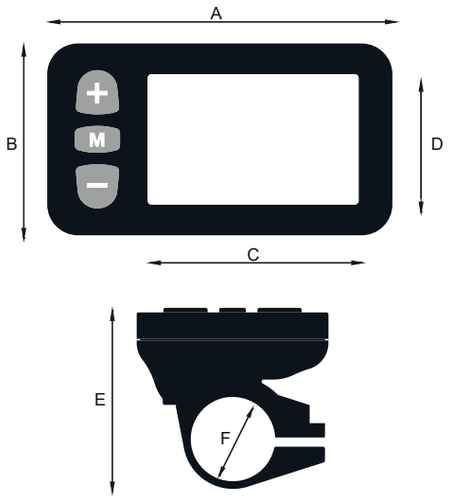

Dimension A	90mm
Dimension B	50mm
Dimension C	56mm
Dimension D	34mm
Dimension E	47mm
Dimension F	22mm

Tests&Certifications

IP-Code	IP65
Certifications	CE/EN15194 Rohs

LCD PANEL C400

Mounting Parameters

Communication	UART
Dimensions	95/63/61mm
Handlebar for Holding	22/25.4/32mm

Core Data

Screen	LCD
Display Type	FSTN
Rated Voltage	24/36/48V

Display Information

ON/OFF	Yes
Current display	Yes
Speed display	Yes
KM/H & MPH	Yes
Backlight indicator	Yes
6KM/H work	Yes
PAS level selection	Yes
Error code indicator	Yes
SET operation	Yes
Distance indicator	Yes
Trip time indicator	Yes
Battery indicator	Yes
Auto sleep after 5 minutes	Yes

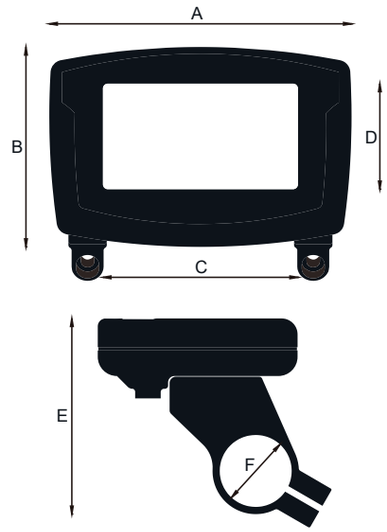

Dimension A	95mm
Dimension B	63mm
Dimension C	61mm
Dimension D	33mm
Dimension E	61mm
Dimension F	22/25.4/32mm

Tests&Certifications

IP-Code	IP65
Certifications	CE/EN15194 Rohs

LCD PANEL C500

Mounting Parameters

Communication	UART/CAN
Dimensions	98/55/46mm
Handlebar for Holding	22mm

Core Data

Screen	LCD
Display Type	FSTN
Rated Voltage	24/36/48V

Display Information

ON/OFF	Yes
Current display	Yes
Riding mode selection	Yes
Speed display	Yes
KM/H & MPH	Yes
Backlight indicator	Yes
6KM/H work	Yes
PAS level selection	Yes
Error code indicator	Yes
SET operation	Yes
Distance indicator	Yes
Trip time indicator	Yes
Battery indicator	Yes
Auto sleep after 5 minutes	Yes

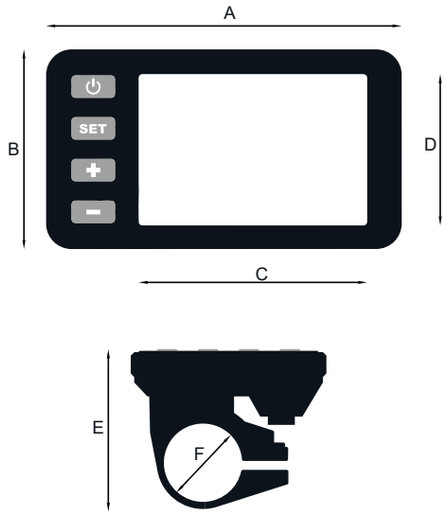

Dimension A	98mm
Dimension B	55mm
Dimension C	63mm
Dimension D	42mm
Dimension E	46mm
Dimension F	22mm

Tests&Certifications

IP-Code	IP65
Certifications	CE/EN15194 Rohs

LCD PANEL C500B

Mounting Parameters

Communication	UART/CAN
Dimensions	98/55/45mm
Handlebar for Holding	22mm

Core Data

Screen	LCD
Display Type	FSTN
Rated Voltage	24/36/48V

Display Information

ON/OFF	Yes
Current display	Yes
Riding mode selection	Yes
Speed display	Yes
KM/H & MPH	Yes
Backlight indicator	Yes
6KM/H work	Yes
PAS level selection	Yes
Error code indicator	Yes
SET operation	Yes
Distance indicator	Yes
Trip time indicator	Yes
Battery indicator	Yes
Mobile phone charging indicator	Yes
Auto sleep after 5 minutes	Yes

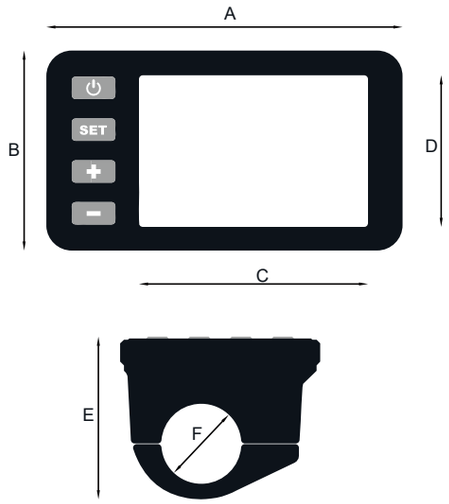

Dimension A	98mm
Dimension B	55mm
Dimension C	63mm
Dimension D	42mm
Dimension E	45mm
Dimension F	22mm

Tests&Certifications

IP-Code	IP65
Certifications	CE/EN15194 Rohs

LED PANEL E200

Mounting Parameters

Communication	UART/ANALOG
Dimensions	74/35/44mm
Handlebar for Holding	22mm

Core Data

Screen	LED
Rated Voltage	24/36/48V

Display Information

ON/OFF	Yes
Battery indicator	Yes
Assist level	Yes

Tests&Certifications

IP-Code	IP65
Certifications	CE/EN15194 Rohs

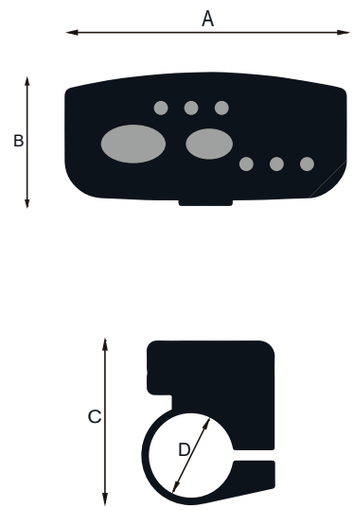

Dimension A	74mm
Dimension B	35mm
Dimension C	44mm
Dimension D	22mm

LED PANEL E300

Mounting Parameters

Communication	UART/ANALOG
Dimensions	73/61/46mm
Handlebar for Holding	22mm

Core Data

Screen	LED
Rated Voltage	24/36/48V

Display Information

ON/OFF	Yes
Battery indicator	Yes
Assist level	Yes
6Km/h work	Yes

Tests&Certifications

IP-Code	IP65
Certifications	CE/EN15194 Rohs

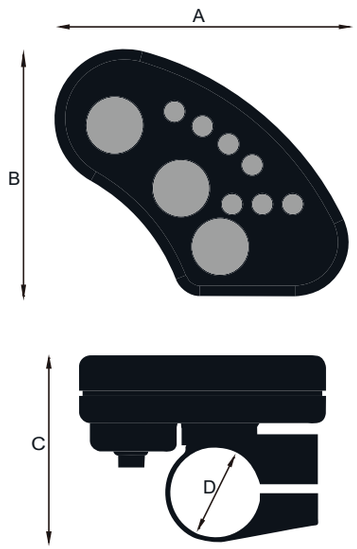

Dimension A	73mm
Dimension B	61mm
Dimension C	46mm
Dimension D	22mm

LED PANEL E400

Mounting Parameters

Communication	UART
Dimensions	62/43/48mm
Handlebar for Holding	Φ22mm

Core Data

Screen	LED
Display Type	LED
Nominal Voltage	5V

Display Information

ON/OFF	Yes
Current display	No
Speed display	No
KM/H & MPH	No
Backlight indicator	No
6KM/H work	Yes
Assist level selection	Yes
Error code indicator	Yes
SET operation	No
Distance indicator	No
Trip time indicator	No
Battery indicator	Yes
Auto sleep after 5 minutes	Yes
Blue tooth connection—E400	Yes

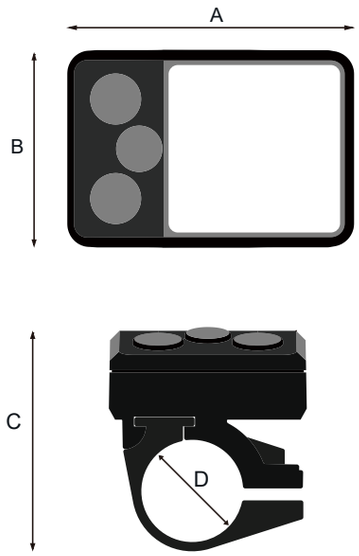

Dimension A	62mm
Dimension B	43mm
Dimension C	48mm
Dimension D	Φ22mm

Tests&Certifications

IP-Code	IP65
Certifications	CE/EN15194 Rohs

DUAL BATTERY BALANCER

Dual battery balancer information

Charge and discharge protection	Yes
Discharge power management	Yes
Dimension A	51mm
Dimension B	26mm
Dimension C	16mm
Dimension D	12mm

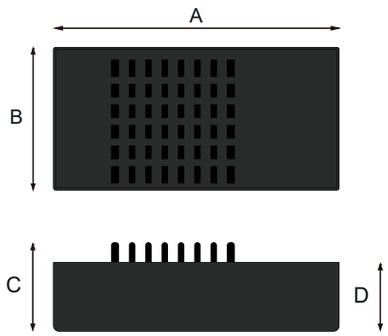

DUAL BATTERY BALANCER RATED WORKING INDICATORS

	DB-6040	DB-6060	DB-6080	DBC-6060
Chargeable	No	No	No	Yes
Rated voltage	60V	60V	60V	60V
Two-way maximum passing current	40A	60A	80A	60A
Single maximum pasing current	20A	30A	40A	30A

Button A200

Button Information

Keys	+ − SET ⏻
Application	eCity/eMTB/eFat/eCargo/eScooter
Handlebar for holding	φ22.2mm
Dimension A	54.5mm
Dimension B	24.3mm
Dimension C	43.2mm
Dimension D	9.2mm
Dimension E	22.2mm
IP-Code	IP65

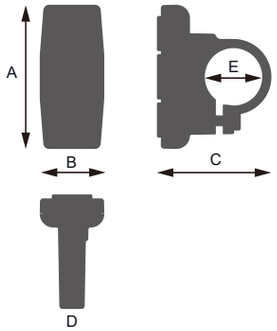

Button A300

Button Information

Keys	+ − SET ⏻
Application	eCity/eMTB/eFat/eCargo/eScooter
Handlebar for holding	φ22.2mm
Dimension A	54.5mm
Dimension B	24.3mm
Dimension C	48.2mm
Dimension D	9.3mm
Dimension E	22.2mm
Usb 2.0	Yes
IP-Code	IP65

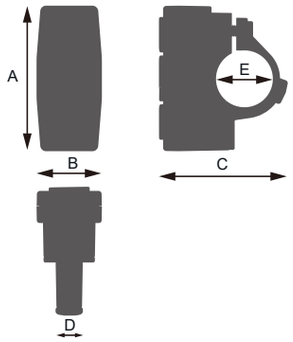

Button A400

Button Information

Keys	+ − SET ⏻
Application	eCity/eMTB/eFat/eCargo/eScooter
Handlebar for holding	φ22.2mm
Dimension A	41.9mm
Dimension B	44mm
Dimension C	43.1mm
Dimension D	12mm
Dimension E	22.2mm
IP-Code	IP65

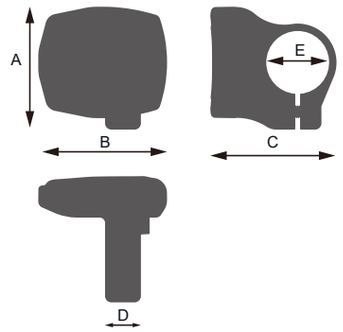

Button A400-22

Button Information

Keys	+ − SET ⏻
Application	eCity/eMTB/eFat/eCargo/eScooter
Handlebar for holding	φ22.2mm
Dimension A	42.8mm
Dimension B	44.4mm
Dimension C	44.5mm
Dimension D	13.8mm
Dimension E	22.2mm
Type-c	Yes
IP-Code	IP65

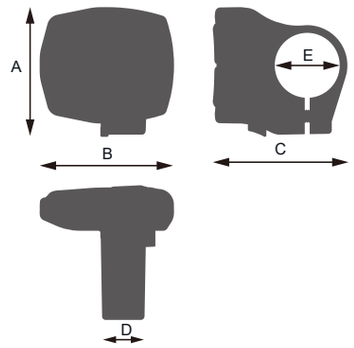

Button A400-32

Button Information

Keys	+ − SET ⏻
Application	eCity/eMTB/eFat/eCargo/eScooter
Handlebar for holding	φ31.8mm
Dimension A	47.1mm
Dimension B	44.4mm
Dimension C	53.8mm
Dimension D	13.4mm
Dimension E	31.8mm
Type-c	Yes
IP-Code	IP65

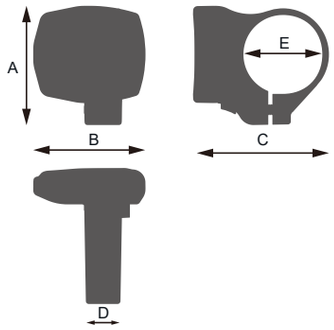

Button A500-USB2.0

Button Information

Keys	▲ ▼ SET ⏻
Application	eCity/eMTB/eFat/eCargo/eScooter
Handlebar for holding	φ22.2mm
Dimension A	52mm
Dimension B	20mm
Dimension C	42mm
Dimension D	20mm
Dimension E	22.2mm
USB 2.0	Yes
IP-Code	IP65

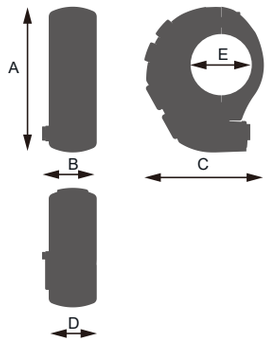

Button A704

Button Information

Keys	+ − ⏻ M
Application	eCity/eMTB/eFat/eCargo/eScooter
Handlebar for holding	φ22.2mm
Dimension A	39mm
Dimension B	20mm
Dimension C	44mm
Dimension D	14mm
Dimension E	22.2mm
IP-Code	IP65

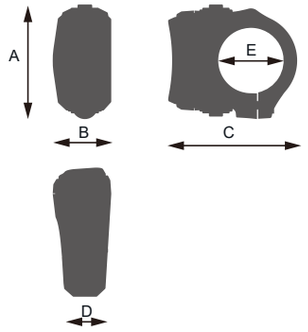

Button A708

Button Information

Keys	+ − ⏻ M ◀ ▶
Application	eCity/eMTB/eFat/eCargo/eScooter
Handlebar for holding	φ22.2mm
Dimension A	62mm
Dimension B	37mm
Dimension C	47mm
Dimension D	10mm
Dimension E	22.2mm
Type-c	Yes
IP-Code	IP65

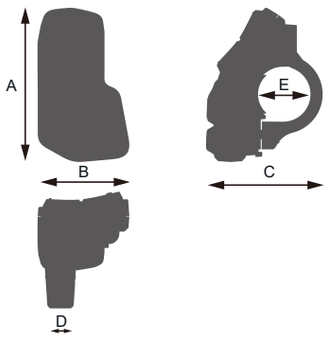

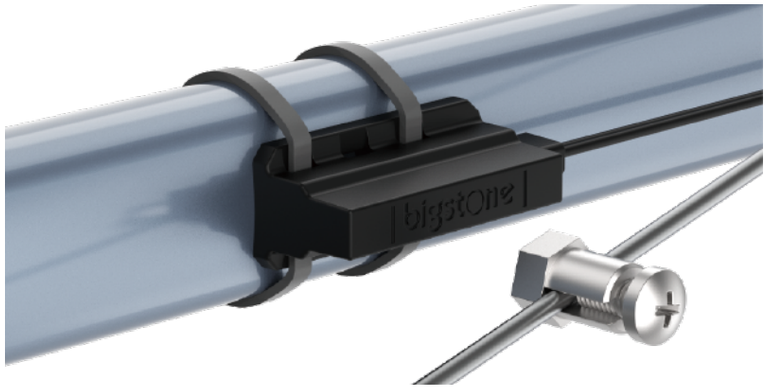

WHEEL SENSOR LS02

Wheel Sensor Information

Rated voltage (VDD)	3.0V-5.0V
Definition of leading-out Wire	1.signal 2.GND
Max sensing distance	12mm
Fixed method	Ribbon
Dimension A	39mm
Dimension B	16mm
Dimension C	18mm

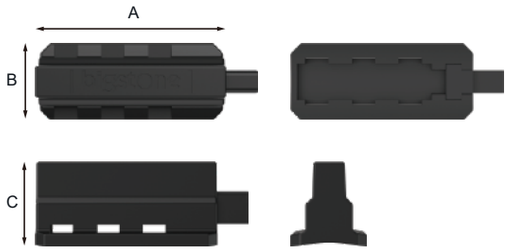

WHEEL SENSOR LS03

Wheel Sensor Information

Rated voltage (VDD)	3.0V-5.0V
Definition of leading-out Wire	1.signal 2.GND
Max sensing distance	12mm
Fixed method	Screw
Dimension A	55mm
Dimension B	16mm
Dimension C	15mm

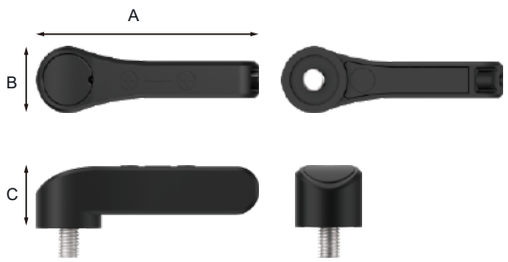

WHEEL SENSOR LS04

Wheel Sensor Information

Rated voltage (VDD)	3.0V-5.0V
Definition of leading-out Wire	1.VDD 2.signal 3.GND
Max sensing distance	25mm
Fixed method	Screw
Dimension A	47mm
Dimension B	17mm
Dimension C	15mm

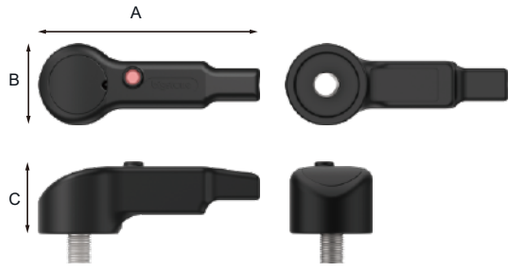

WHEEL SENSOR LS05

Wheel Sensor Information

Rated voltage (VDD)	5.0±0.5V
Definition of leading-out Wire	1.GND 2.H 3.5V+
Max sensing distance	7mm
Fixed method	Screw
Dimension A	18mm
Dimension B	16.3mm
Dimension C	7.5mm

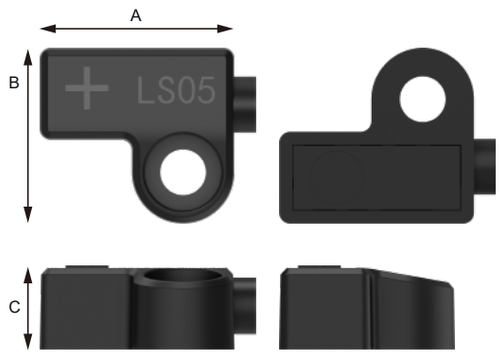

SENSOR P12L/P12L-H/P14L/P24L/P48L

Sensor Information

Installed on left	Yes
With LED indicator	Yes
Diameter : 44mm	Yes
Thickness : 10.5mm	Yes

Dimension A	15.6mm
Dimension B	44mm
Dimension C	7mm

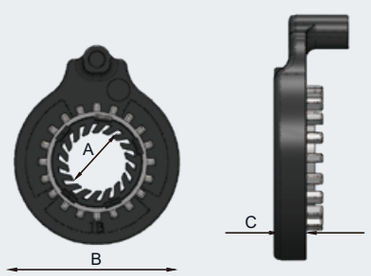

SENSOR SIGNALS

	P12L	P12L-H	P14L	P24L	P48L
Signal forward pedal	12pulse	12pulse	14pulse	24pulse	48pulse
Signal backward pedal	12pulse	12pulse	0pulse	0pulse	0pulse
forward pedal duty	40%	60%	20%	20%	20%
backward pedal duty	60%	40%	0%	0%	0%

SENSOR V12LS/V24LS

Sensor Information

Installed on left	Yes
With LED indicator	Yes
Diameter : 52mm	Yes
Thickness : 7mm	Yes

Dimension A	15.4mm
Dimension B	52mm
Dimension C	4mm

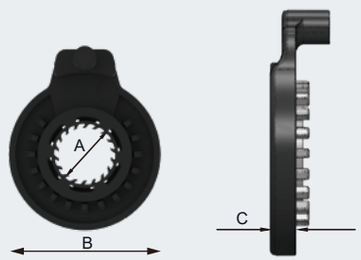

SENSOR SIGNALS

	V12LS	V24LS
Signal forward pedal	12pulse	24pulse
Signal backward pedal	0pulse	0pulse
forward pedal duty	15%	30%
backward pedal duty	0%	0%